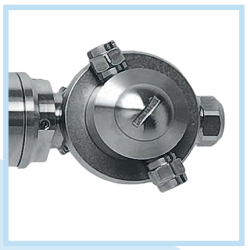

PA High Pressure Rotary Cleaning Heads ..... 178 - 181
PA Tank Cleaning Head Nozzles 182
Moog Tank & Container Cleaners 183
High Pressure Rotary Heads ..... 184 - 185
Low Pressure Rotary Heads 186

Available from B&G Cleaning Systems Call
0808 163 7983

High Pressure Rotary Cleaning Heads

PA Rotating Tank Cleaners & Cleaning Heads Working Process

Air, electric & hydrokinetic (water) driven rotary cleaners & cleaning heads for fast effective cleaning of tanks, containers, barrels & drums. All models are suitable for hot or cold water systems from 30 to 140 bar working pressure and flows up to 300 Lpm. The cleaning cycle of orbital heads is completed with two rotations around the vertical axis; after the jets draw a hypothetical sphere once, they hit the same spots for a second time. All PA cleaning heads are individually tested to order according to the specified flow and pressure and marked with a serial number.

Air & electric driven units offer a steady rotational speed independent of water flow, so suitable even for low flow applications. Hydrokinetic, self-propelled units have rotational speed proportional to the inlet flow and is adjustable within the specified rates by changing the size of the internal injectors. Hydrokinetic cleaners avoid the use of oil & grease so avoids the risk of contamination in the cleaning process and the rotational speed is independent from water & ambient temperature.

Selection Criteria.

The main characteristics to take into account to select the right model are:

- Working pressure and flow rate.
- Shape & dimensions of the container to clean.
- Diameter of inlet hole.
- Nature of substance to clean off.
- Nature of detergent or additive in the water.
- Allowed time to carry out a washing cycle.
- 2 or 4 nozzles might be necessary depending on the size of the container.
- For orbital coverage it is advised to use 4 nozzles in containers of more than 3m in diameter.
- Extended nozzles are available in sizes above 065 jets and offer a more compact water jet with more impact.

If using aggressive chemical detergents, it is advisable to read the user manuals which can be downloaded at www.dualpumps.co.uk and verify the compatibility of the internal seals. Contact our technical sales department to discuss the application before ordering any heads.

A80FR2 Series Self Propelled Cleaning Head - Flow up to 50 Lpm

Nozzles not included see page 182

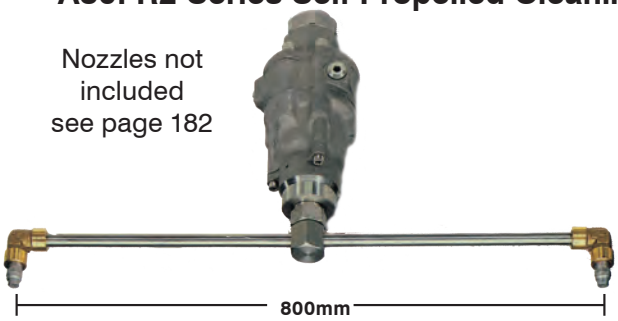

Part No.	Head Ø	Bar	Lpm	Rpm	Nozzles
25.4840.25	800mm	30-140	20-25	50-150	2x 1/4"NPT
25.4840.40	800mm	30-140	30-40		
25.4840.50	800mm	30-140	40-50		

- AISI 303 stainless steel construction
- EPDM seals (Viton or Kalrez® available)
- 0-90°C rated temperature
- Requires 2 x 1/4" nozzles

M21E Series Electric Driven Tank Cleaner - Flow up to 21 Lpm

Part No.	Shaft Length	Head Ø	Bar	Lpm	Rpm	Nozzles
25.4300.00	550mm	40mm	220	21	14	2x M4

- 360° coverage
- 0-90°C rated temperature
- 12VDC, 8W motor - 14 Rpm
- Supplied with 230V, 50Hz 3 pin adaptor
- Stainless steel construction
- EPDM seals (options available)
- Supplied with selection of nozzle sizes
- M22M inlet
- Supplied with barrel fitting

Nozzles NOT included and must be specified at time of order - see P182

M63PA-ATEX Air Driven Tank Cleaners - Flow up to 40 Lpm

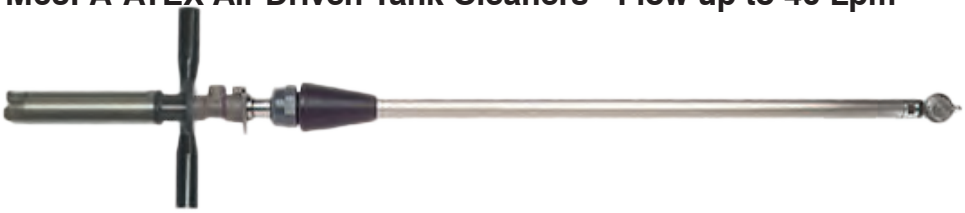

Part No.	Shaft Length	Head Ø	Bar	Lpm	Rpm	Nozzles
25.4526.00	650mm	65mm	40-140	15-40	8-13	2 or 4x 1/8"NPT
25.4520.00	915mm	65mm	40-140	15-40	8-13	2 or 4x 1/8"NPT
TSA air motor - Air consumption 3.8l/sec at 3 Bar - Torque 105 Nm at 3 Bar						

- 360° coverage
- 0-90°C rated temperature
- AISI 303 stainless steel construction
- EPDM seals (Viton or Kalrez® available)
- 4x 1/8"NPT nozzles (not included - see page 182)
- 3/8" BSPF inlet
- Supplied with barrel fitting & handles
- Other shaft lengths & nozzle options available, call sales office for full list of options

M85PA-ATEX Air Driven Tank Cleaners - Flow up to 80 Lpm

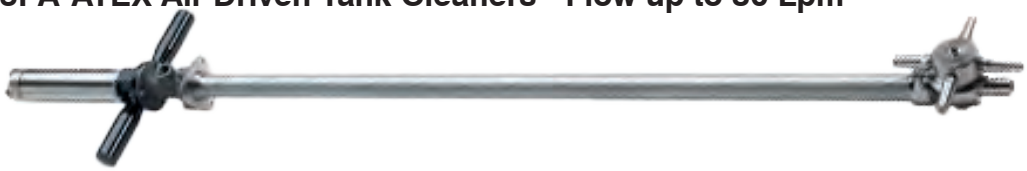

Part No.	Shaft Length	Head Ø	Bar	Lpm	Rpm	Nozzles
25.4720.00	915mm	86mm*	30-140	20-80	8-13	2 or 4x 1/4"NPT
*Ø133mm with extended nozzles						

- 360° coverage
- 0-90°C rated temperature
- AISI 303 stainless steel construction
- EPDM seals (Viton or Kalrez® available)
- 4x 1/4"NPT nozzles (not included - see page 182)
- 3/8" BSPF inlet
- Supplied with barrel fitting & handles
- Other shaft lengths & nozzle options available, call sales office for full list of options

MI63 Self Propelled Tank Cleaners - Flow up to 50 Lpm

Part No.	Shaft Length	Head Ø	Bar	Lpm	Rpm	Nozzles
25.4600.20	915mm	65mm	30-140	15-21	10-16	2 or 4x 1/8"NPT
25.4600.30	915mm	65mm	30-140	25-30		
25.4600.40	915mm	65mm	30-140	30-40		
25.4600.50	915mm	65mm	30-140	40-50		

- 360° coverage
- 0-90°C rated temperature
- AISI 303 stainless steel construction
- EPDM seals (Viton or Kalrez® available)
- 4x 1/8"NPT nozzles (not included - see page 182)
- 3/4" BSPF inlet
- Supplied with barrel fitting & handles
- Other shaft lengths & nozzle options available, call sales office for full list of options

Nozzles NOT included and must be specified at time of order - see P182

Axial & Orbital Water Powered Cleaning Heads

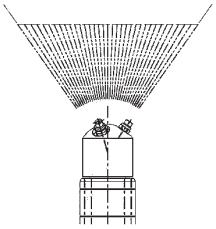

A42FR2 Series Axial Cleaning Heads - Flow up to 60 Lpm

Part No.	Head Ø	Bar	Lpm	Rpm	Nozzles
25.5150.20	72mm	40-140	20	180-260	3x 1/4"NPT
25.5150.26	72mm	40-140	20-30		
25.5150.33	72mm	40-140	50-60		
25.5400.30	72mm	40-140	30-40	180-260	4x 1/4"NPT

- 70° coverage
- 0-90°C rated temperature
- Stainless steel & anodised aluminium
- Viton & PTFE seals
- 1/2" BSPF inlet

Nozzles NOT included and must be specified at time of order - see P182

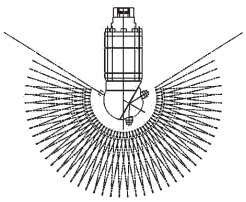

A42R & A42R2 Series Cleaning Heads - Flow up to 50 Lpm

Part No.	Head Ø	Bar	Lpm	Rpm	Nozzles
25.5180.20	97mm	40-140	20	29-36	3x 1/8"NPT
25.5180.30	97mm	40-140	20-30		
25.5180.40	97mm	40-140	30-40		
25.5200.20	97mm	40-140	20	110-180	3x 1/8"NPT
25.5200.24	97mm	40-140	20-25		
25.5200.28	97mm	40-140	25-30		
25.5200.34	97mm	40-140	30-40		
25.5200.33	97mm	40-140	40-50		

- 244° coverage
- 0-90°C rated temperature
- Stainless steel & anodised aluminium
- Viton & PTFE seals
- 1/2" BSPF inlet

Nozzles NOT included and must be specified at time of order - see P182

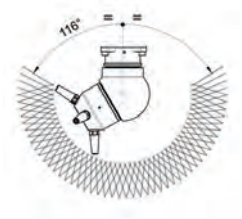

A80RF Series Cleaning Head - Flow up to 120 Lpm

Part No.	Head Ø	Bar	Lpm	Rpm	Nozzles
25.4890.90	151mm	30-140	85-120	10-16	2 or 4 x 1/4"NPT

- 244° coverage
- 0-90°C rated temperature
- AISI 303 stainless steel construction
- EPDM seals (Viton® or Kalrez® available)
- 3/4" BSPF inlet

STAINLESS STEEL

Rotational speed is determined by internal injector size & flow rate.
Nozzles & injectors are not included and are spec'd & priced separately to suit application.
Contact our technical sales department before ordering this product.

A30R Series Orbital Cleaning Head - Flow up to 33 Lpm

Part No.	Head Ø	Bar	Lpm	Rpm	Nozzles
25.3300.12	86mm	30-140	9-12	20-30	2 or 4 x M4
25.3300.15	86mm	30-140	11-15		
25.3300.18	86mm	30-140	14-18		
25.3300.25	86mm	30-140	18-25		
25.3300.33	86mm	30-140	25-33		

- 360° coverage
- 0-90°C rated temperature
- AISI 303 stainless steel construction
- EPDM seals (Viton® or Kalrez® available)
- 1/2" BSPF inlet

Nozzles NOT included and must be specified at time of order - see P182

A42R-360° Series Cleaning Heads - Flow up to 50 Lpm

Part No.	Head Ø	Bar	Lpm	Rpm	Nozzles
25.5360.15	108mm	40-140	13-17	18-24	2 or 4 x 1/8"NPT
25.5360.20	108mm	40-140	20		
25.5360.25	108mm	40-140	25		
25.5360.30	108mm	40-140	30		
25.5360.35	108mm	40-140	35		
25.5360.40	108mm	40-140	40		
25.5360.50	108mm	40-140	50		

Ex ATEX ON REQUEST

- 360° coverage
- 0-90°C rated temperature
- AISI 303 stainless steel construction
- EPDM & Viton® seals
- 1/2" BSPF inlet

Nozzles NOT included and must be specified at time of order - see P182

A80R Series Cleaning Heads - Flow up to 120 Lpm

Part No.	Head Ø	Bar	Lpm	Rpm	Nozzles
25.4820.20	165mm	30-140	15-21	10-16	2 or 4 x 1/4"NPT
25.4820.25	165mm	30-140	20-25		
25.4820.30	165mm	30-140	25-30		
25.4820.40	165mm	30-140	30-40		
25.4820.50	165mm	30-140	40-50		
25.4820.60	165mm	30-140	50-60		
25.4820.70	165mm	30-140	60-70		
25.4820.80	165mm	30-140	70-85		
25.4820.90	165mm	30-140	85-120		
25.4850.00*	165mm	30-140	20-80	60-120	2 or 4x 1/4"NPT

***Injectors to suit system flow rate NOT included and must be specified at time of order**

Ex ATEX ON REQUEST

- 360° coverage
- 0-90°C rated temperature
- AISI 303 stainless steel construction
- EPDM seals (Viton® or Kalrez® available)
- 3/4" BSPF inlet

Nozzles NOT included and must be specified at time of order - see P182

Optional Nozzle Guard

Part No.
25.4822.00

- For A80R head

A300R Series Orbital Cleaning Heads - Flow up to 300 Lpm

Part No.	Head Ø	Bar	Lpm	Rpm	Nozzles
25.6000.10	183mm	30-70	100	4-5	4 x 1/4"NPT
25.6000.15	183mm	30-70	130		
25.6000.17	183mm	30-70	150		
25.6000.20	183mm	30-70	180		
25.6000.24	183mm	30-70	220		
25.6000.30	183mm	30-70	300		

- 360° coverage
- 0-90°C rated temperature
- AISI 303 stainless steel construction
- Viton & PTFE seals
- 1 1/4" BSPF inlet

Nozzles NOT included and must be specified at time of order - see P182

Tank Cleaning Head Nozzle Options

Must be specified when ordering a tank cleaner

Nozzles are spec'd & priced separately to the cleaning heads and must be selected to suit system performance and application. Contact our technical sales department before ordering.

PA M4 Nozzles - 0° Pencil Jet

Part No.	Size
80.0350.51	02 - 1.0mm
80.0351.51	025 - 1.1mm
80.0352.51	03 - 1.2mm
80.0353.51	035 - 1.3mm
80.0354.51	04 - 1.4mm

- For PA A30R cleaning heads

PA 1/8" Nozzles - 0° Pencil Jet

Part No.	Size
16.1363.15	015
16.1363.20	02
16.1363.30	03
16.1363.40	04
16.1363.45	045
16.1363.50	05
16.1363.60	06
16.1363.70	07
16.1363.90	09

- For PA A42R, A42R-360° MI63 cleaning heads
- With guide vane

PA 1/4" Nozzles - 0° Pencil Jet

Part No.	Size
16.1380.30	03
16.1380.35	035
16.1380.40	04
16.1380.45	045
16.1380.50	05
16.1380.55	055
16.1380.60	06
16.1380.65	065
16.1380.70	07

- For PA A42FR-2 cleaning heads
- With guide vane

PA 1/4" Extended Nozzles - 0° Pencil Jet

Part No.	Size
80.0418.23	07
80.0419.23	08
80.0420.23	09
80.0421.23	095
80.0422.23	11
80.0423.23	12
80.0424.23	13
80.0425.23	14
80.0426.23	15
80.0427.23	16
80.0428.23	18
80.0429.23	19
80.0430.23	20
80.0435.23	25
80.0440.23	30
80.0444.23	40
80.0445.23	50

- For PA A80R, A80R2, A80RF, A300R cleaning heads
- With guide vane

Tank & Container Cleaners - Electric & Air Driven

The Moog Container Cleaner is a three dimensional rotating head for the internal cleaning of tanks, barrels & containers. All models are suitable for use with hot or cold pressure washers or individual pressure pump sets.

- 360° coverage
- Max press 250 Bar
- Max flow 50 Lpm
- Max temp 150°C
- AISI316 stainless steel
- Viton or Kalrez® seals
- Shaft lengths 500 to 2000mm
- 54mm minimum tank opening
- 2 x 1/8" nozzle head

Moog ER55 & ERL55 Series Electric Driven Tank Cleaners

360° Cleaning Area

Part No.	Voltage	Shaft Length	Seals
ER-55-0500-110V	110	500mm	Viton
ER-55-0500	230		
ER-55-0700-110V	110	700mm	
ER-55-0700	230		
ER-55-1000-110V	110	1000mm	
ER-55-1000	230		
ER-55-1500-110V	110	1500mm	
ER-55-1500	230		
ER-55-2000-110V	110	2000mm	
ER-55-2000	230		

Part No.	Voltage	Shaft Length	Seals
ERL-55-0500-110V	110	500mm	Kalrez® (Solvent resistant)
ERL-55-0500	230		
ERL-55-0700-110V	110	700mm	
ERL-55-0700	230		
ERL-55-1000-110V	110	1000mm	
ERL-55-1000	230		
ERL-55-1500-110V	110	1500mm	
ERL-55-1500	230		
ERL-55-2000-110V	110	2000mm	
ERL-55-2000	230		

Other voltages, head speeds & nozzle options available, call sales office for full list of options

FDA APPROVAL AVAILABLE

STAINLESS STEEL

- 11 Rpm head speed
- 3/8" BSPM inlet

Moog AR55 & ARL55 Series Air Driven Tank Cleaners

ATEX ON REQUEST

Part No.	Shaft Length	Seals
AR-55-0500	500mm	Viton
AR-55-0700	700mm	
AR-55-1000	1000mm	
AR-55-1500	1500mm	
AR-55-2000	2000mm	

Part No.	Shaft Length	Seals
ARL-55-0500	500mm	Kalrez® (Solvent resistant)
ARL-55-0700	700mm	
ARL-55-1000	1000mm	
ARL-55-1500	1500mm	
ARL-55-2000	2000mm	

Other nozzle options available, call sales office for full list of options

360° Cleaning Area

FDA APPROVAL AVAILABLE

STAINLESS STEEL

- Mannesmann air motor
- Air consumption: 9.9 litres per second at 6.3 Bar
- 10-20 Rpm adjustable head speed
- 3/8" BSPM inlet

Moog Tank Options - Must be specified when ordering a tank cleaner

Nozzle

Jet size & number of nozzles must be specified at time of order.

Part No.	Jet Size	Jet Angle
008.5123.2-010	01	0°
008.5123.2-020	02	0°
008.5123.2-030	03	0°
008.5123.2-035	035	0°
008.5123.2-040	04	0°
008.5123.2-050	05	0°
008.5123.2-060	06	0°
008.5123.2-070	07	0°
008.5123.2-080	08	0°
008.5123.2-090	09	0°
008.5123.2-100	10	0°

4 Nozzle Head Upgrade

Part No.	Description
008.5126.3	Quote at time of order to upgrade from standard 2 nozzle head to 4 nozzle

Container Mounting Options

Part No.	Description
008.1502.0	Barrel Screw - M64x4 x 2" thread Delrin (POM)

Part No.	Description
008.1500.0	Bunghole mount 51-80mm o.d.Delrin/nitrile

Double Handle

Part No.
008.1501.0

IMPORTANT: The tank cleaners must be ordered with the required options specified. Call our technical department before ordering this product

High Pressure Rotary Heads

GR38 Rotating Head - 350 Bar

Part No.	Bar	Lpm	Inlet	Outlet
26.1400.00	350	40	3/8" BSPM	2 x M12F

- 90°C max temp
- Nickel plated brass body
- Twin bearing - Ceramic/Viton seals
- 1/8" central outlet fitted with plug
- 36mm Ø x 115mm long

SW35 Rotating Head - 350 Bar

Part No.	Bar	Lpm	Inlet	Outlet
26.1412.45	350	40	3/8" F BSP	3/8" F BSP
26.1412.48	350	40	3/8" F BSP	3/8" M BSP

- 120°C max temp
- Nickel plated brass
- Twin bearing - Ceramic/Viton seals

Mosmatic Rotating Heads - 170 to 275 Bar

Part No.	Bar	Inlet	Outlet
37.103	170	3/8" BSPF	3/8" M BSP
57.103	275	3/8" BSPF	3/8" M BSP

- 120°C max temp
- Nickel plated brass
- Triple bearing - Ceramic seals

Mosmatic DYKIV Rotating Head - 350 Bar

Part No.	Bar	Inlet	Outlet
54.103	350	3/8" BSPF	3/8" M BSP

- 120°C max temp
- Stainless steel construction
- 4 x Ceramic bearings - Carbide seals
- Suitable for salt water

Mosmatic Rotary Arms

Part No.	Ø mm	Outlet Arms
82.805	100	Twin
82.806	150	Twin
82.807	200	Twin
82.809	300	Twin
82.813	500	Twin
82.815	600	Twin

Part No.	Ø mm	Outlet Arms
82.833	350 x 200	Quad
82.837	400 x 250	Quad
82.843	500 x 350	Quad

- 3/8" BSPF inlet
- 1/8" BSPF outlets
- 275 Bar max pressure
- Stainless steel

GR38 Rotating Head - 350 Bar

Part No.	Arm Width	Bar	Lpm	Inlet	Outlet
26.1420.00	210mm	350	40	3/8" BSPM	2 x 1/8" F NPT
26.1440.00	400mm	350	40	3/8" BSPM	2 x 1/8" F NPT

- 90°C max temp
- Nickel plated brass body
- Twin bearing - Ceramic/Viton seals
- 1/8" central outlet fitted with plug

GR58 Rotating Head - 500 Bar

Part No.	Arm Width	Bar	Lpm	Inlet	Outlet
26.1460.00	402mm	500	40	1/2"BSPF	2 x 1/8" F NPT

- 90°C max temp
- Stainless steel body & pin
- 2 x stainless steel bearings
- Ceramic seals & viton o-rings

WAW Rotating Head - 276 Bar

Part No.	Description	Inlet	Outlet
85.790.006	WAW head without arms	1/4" F NPT taper	1/4" F NPT
Dimensions 88mm Ø x 154mm long			
9918-4826	1/4" M NPT x 9/16" JICM inlet adaptor		

- Max pressure 276 Bar
- Max flow 30 Lpm
- Max temp 80°C

WAW Rotary Arms

Part No.	Ø	Inlet	Outlets	Material	WAW Model
85.791.009	13"	1/4" M NPT	2x 1/4" F NPT	Plated steel	n/a
85.791.007	14"	1/4" M NPT	2x 1/4" F NPT	Plated steel	BE1800WAW
85.792.011	16"	1/4" M NPT	2x 1/4" F NPT	Plated steel	BE1600WAW
85.791.013	17"	1/4" M NPT	2x 1/4" F NPT	Plated steel	n/a
85.792.007	20"	1/4" M NPT	2x 1/4" F NPT	Plated steel	85.403.011
85.792.017	20"	1/4" M NPT	2x 1/4" F NPT	Stainless steel	BE2000SS
85.792.038	24"	1/4" M NPT	3x 1/4" F NPT	Stainless steel	BE2400SS

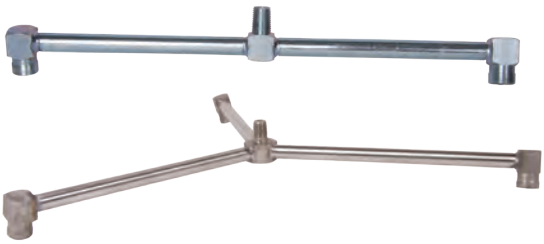

WAW Mounting Bracket

Part No.	Description
85.791.001	Bracket for rotary head
4 x 8mm mounting holes 107mm Ø	

Low Pressure Rotary Heads

Tank Rinsing Head

Part No.	Max Bar	Max Lpm	Max Ø
8185007	4	22	64 mm

- 360° coverage
- Manufactured in polypropylene
- Must be used with **K00107002** (opposite)

Tank Rinsing Head Connection Kit

Part No.
K00107002

- 15mm hose barb attached to 1" threaded connector
- Connection kit for **8185007**

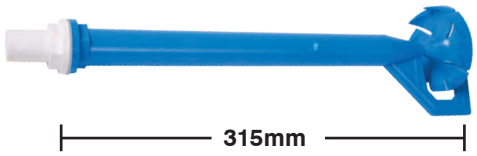

Tank Cleaning Head

Part No.	Max Bar	Max Lpm	Head Ø
CDE36	2	36	70 mm

- Rotary head in plastic
- 1/2" BSP male bulkhead fitting - 3/4" Ø hose tail inlet

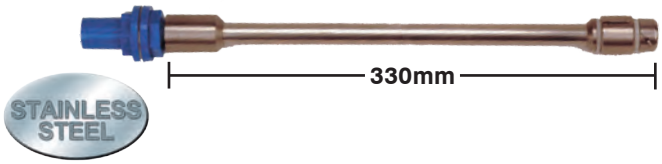

Tank Cleaning Head

Part No.	Max Bar	Max Lpm	Head Ø
TW64	4	45	25 mm

- Rotary head in stainless steel
- Plastic 1/2" BSP male bulkhead fitting - 3/4" Ø hose tail inlet

Tank Rinsing Heads

Part No.	Max Bar	Max Lpm	Coverage
8185000	10	18	240°
8185006	10	34	360°

- 25mm head diameter
- AISI 304 stainless steel
- 1/2" BSPM inlet & bulkhead fitting

Tank Rinsing Heads

Part No.	Max Bar	Max Lpm	Coverage
8185005	10	18	240°
8185003	10	34	360°

- 25mm head diameter
- AISI 304 stainless steel
- 1/4" BSPM inlet
- Compatible with rinsing valve below

Rinsing Head Valve

Part No.	Max Bar	Max Lpm
8185004	10	40
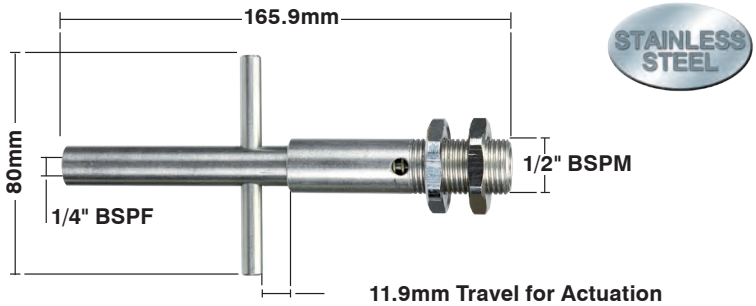
- Manufactured in 304 stainless steel.
- Spring loaded actuation.
- 1/2" BSPM mounting point with 2 back nuts
- Compatible with **8185005** & **8185003** heads